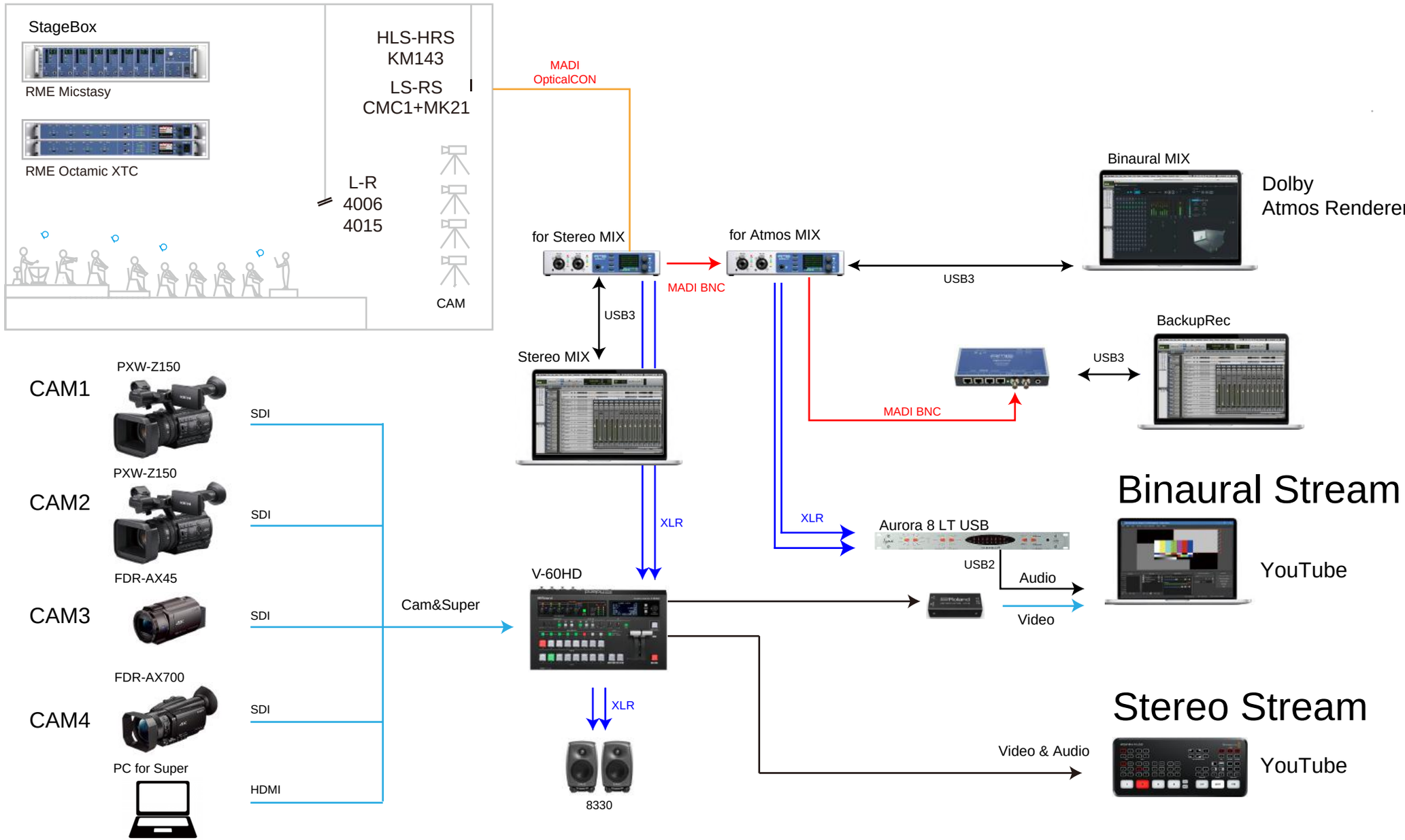# 20220721Live Streaming Signal Routing