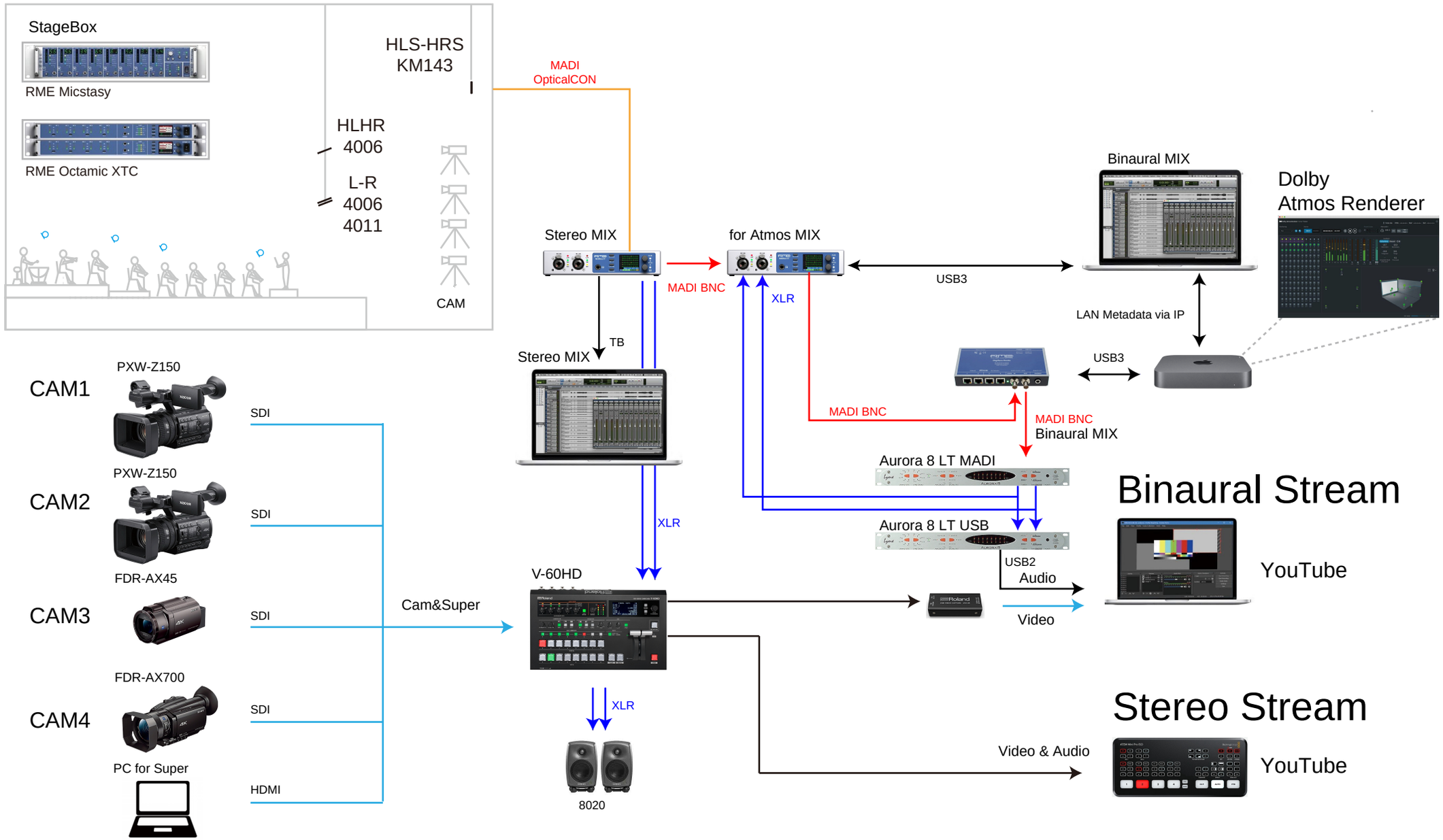20211202NUA Wind Orchestra Signal Routing